Design of an Inertial Measurement Unit for use as a Gimbal Controller

A.Abedi, E. Chalmers, N. Malenczak, R. Fernando, J.Urness

***Abstract*- This report outlines the design of an inertial measurement unit for use in platform stabilization and control. The device measures the displacement from a set input orientation and corrects the platform attitude to the set input. Communication with the system occurs through a Universal Serial Bus (USB) connection. The system can be polled for all values of data present in its memory, making it adaptable as a sensor unit to other methods of use. Additional hardware is included to allow for future integration of a digital compass.**

I. Introduction

This inertial measurement unit (IMU) design measures and corrects the orientation of a platform along two perpendicular axes. The specific application for its design is to control an onboard camera for an Unmanned Aerial Vehicle (UAV) to provide stabilization and camera pointing capability for image capture from the UAV. Through the integration of inertial sensing units this system controls two servo motors to correct the pitch and roll orientation of the camera platform which the unit rests on.

The basic flow of the IMU is outlined in Fig. 1. Analog sensors are used to measure the acceleration and the angular velocity. The sensor output data is digitized by two ADC's, one located on the XInC2 microprocessor and one located external to the microprocessor. The XInC2 processes the inputs. A Kalman filter uses both the accelerometer and the gyroscope data to decide the orientation of the platform. When the orientation is obtained, it is compared to the desired orientation, then the XInC2generates a pulse width modulated signal to direct the servo motor to the desired position.

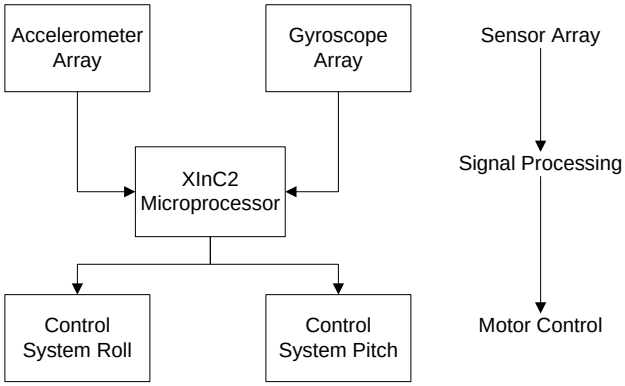

Figure 1: System Block Diagram

II. Hardware Design

A. Power Supply

Onboard the plane a 5 V supply is available. As some of the circuitry runs off of a 3.3 V supply, a step-down DC-DC convertor is used, as seen in Fig. 2. The resistor R40 is included to create a low pass filter with the capacitance of the analog circuitry supplied by the 3.3V node. Additional decoupling capacitance is added by C32, and high-frequency rejection is done by C17.

B. Analog Sensor Design

To measure rotation in the pitch and roll axes the LPR530AL dual axes micro-electromechanical systems (MEMS) gyroscope is chosen for its low cost and small size. The gyroscopes have two available outputs: an output of ±1200 degrees per second full scale range or a four times magnified output that only provides ± 300 degrees per second full scale range [1]. The four times magnified output is used as the pitch and roll of the plane falls well within the ± 300 degrees per second range.

Reference [1] provided the recommended low-pass filter for the output. The filter is implemented by R30/C26 and R22/C33, as seen in Fig. 3. This filter band limits the signals to limit high frequency noise from the sensors.

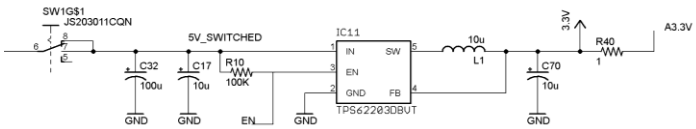

Figure 2: Power Supply

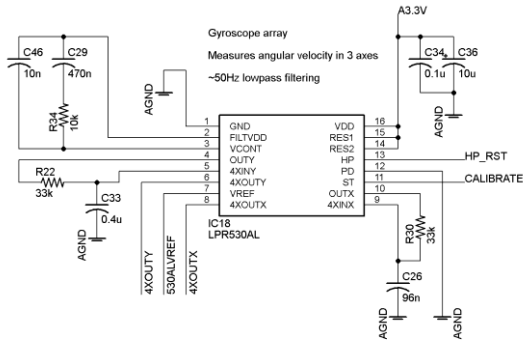

Figure 3: Dual Axis Gyroscope Array

The pitch and roll outputs from the LPR530AL are passed through a signal conditioning circuit consisting of differential amplification and second order low-pass Butterworth filtering with a cut-off frequency of 50 Hz as seen in Fig. 4. The low-pass filtering provides some anti-aliasing and further removal of noise. The differential amplification is used to manipulate the signal voltage levels from the gyroscope output range of 0.23 V to 2.23 V to the 0 V to 2.5 V input range of the external ADC. Differential mode is used for the analog to digital conversion, and the reference signals from both gyroscopes undergo the same signal conditioning as the outputs referenced to them.

The LY530ALH single axis MEMS gyroscope is used to measure rotation along the yaw axis. The yaw measurement is used to calculate centripetal force on banking turns. As with the LPR530AL the four times magnified output is used to provide better resolution [2]. This component and supporting circuitry can be seen in Fig. 5.

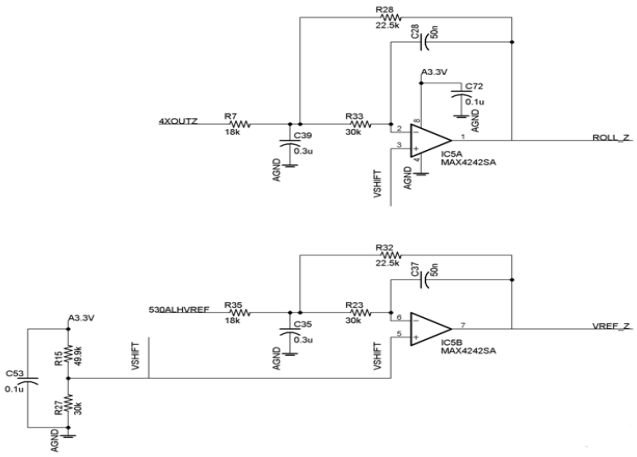

Figure 4: Gyroscope Filters

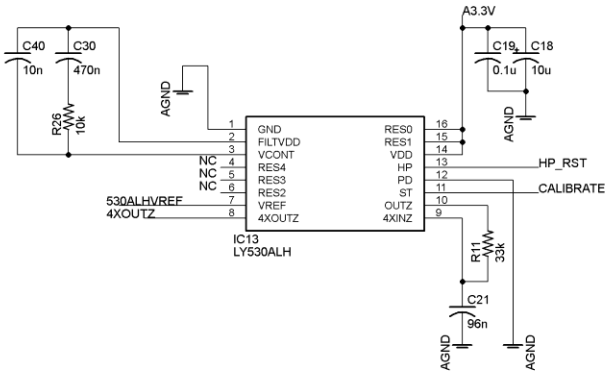

Figure 5: Single Axis Gyroscope

Equivalently for the dual axes gyroscope a conditioning circuit is implemented to provide second order low pass filtering with a cutoff at 50 Hz and to adjust the output signal. This conditioning circuit is similar to those represented in Figure 3.

To provide further information about the location of the plane the LIS331AL three-axis (MEMS) accelerometer is used to measure acceleration in all three axes. This component was chosen for its small size and low cost. It is rated for ± 2g, which is greater than the maximum expected acceleration to be experienced during flight [3].

The three output signals from the LIS331AL are sent to a signal conditioning circuit for filtering and voltage range manipulation. The filtering consists of second-order low pass active filtering for anti-aliasing with a cutoff frequency of 50 Hz. The signal conditioning also consists of differential amplification to change the signal voltage level from the range of 1.17 V to 2.23 V coming out of the accelerometer to the range of 0 V to 1.64 V, the range accepted by the Xinc2's internal ADC [4]. The accelerometer, along with its signal conditioning circuits is shown in Fig. 6.

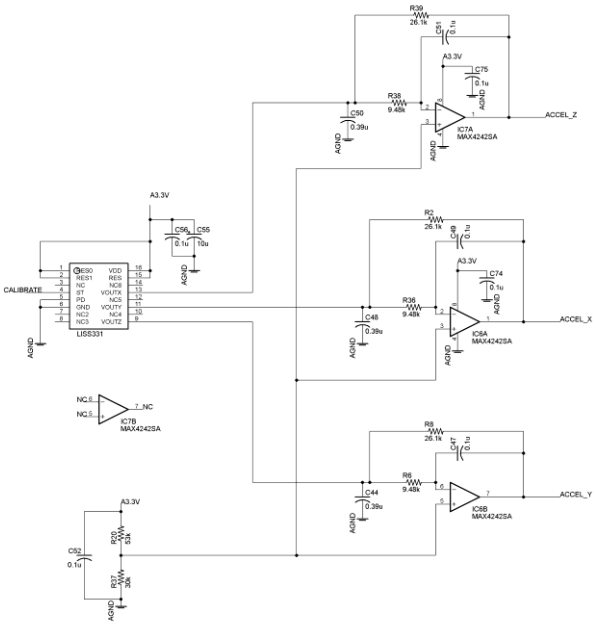

Figure 6: Tri Axial Accelerometer with Filters

The HMC6343 magnetic sensor foot print is included in the circuit design and its peripheral components are populated as specified from its data sheet [5]. This is done at the request of the client and could allow for expansion to include a digital compass. This sensor calculates pitch, roll, and the magnetic heading with tilt compensation and filtering. At this time no firmware is developed for use of the magnetic sensor. The sensor and related components are outlined in Fig 7.

C. *Analog to Digital Conversion*

This ADC 12138 is used to digitize the gyroscope measurements. This ADC is located external to the microprocessor and uses the SPI 0 port to communicate with the XInC2. There is a gyroscope measurement for rotation in each of the X, Y and Z axes. The ADC takes differential measurements between gyroscope outputs and a reference voltage representing zero angular velocity provided by the gyroscope itself. This scheme reduces any effects of drift or noise in the gyroscope outputs as both the signal and the reference will experience the drift and the difference will remain unaffected. The ADC and its suggested components for differential mode amplification are shown in Fig. 8.

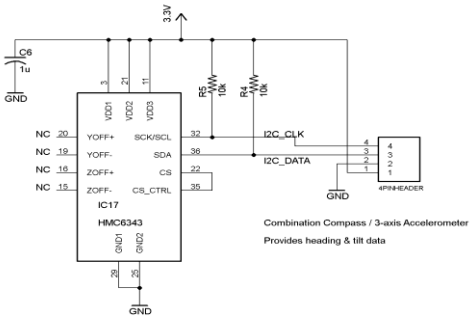

Figure7: HMC6463 3 Axis Magnetic Sensor

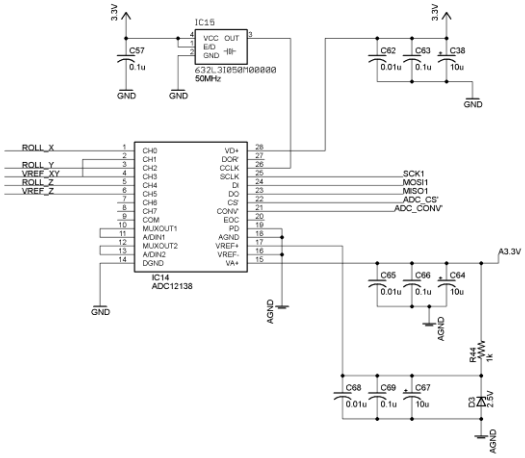

Figure 8: ADC12138 External ADC

D. *USB Interface and Wakeup Circuit*

A USB interface is supplied through the FT232RL USB to serial universal asynchronous receive/transmit (UART) converter. All communication with the UAV's main computer occurs via this interface. The XInC2 microcontroller interfaces with the FT232RL using a UART protocol which is emulated in firmware.

The wakeup circuitry is designed such that the device will be powered up upon communication on the UART_RX line. This communication triggers Q2 to conduct, charging C54 and raising the voltage at the DEVICE_EN node until the comparator (IC3) outputs logic one. This output supplies the enable pin on the TPS62203DBVT switching regulator, turning it on. Once powered up the XInC2 microcontroller holds the DEVICE_EN line high using a general purpose output connected to the HOLD_EN node. The microcontroller can also disable the regulator (effectively shutting down the device) by applying a high voltage to the SHUTDOWN node which is also connected to a general purpose output. Q3 then allows C54 to discharge, resulting in a logic zero at the comparator output. Fig. 9 shows the USB interface and

part of the wake up circuit. Fig. 2 contains the regulator part of the wake up circuit.

Due to unresolved design flaws, the wakeup circuit has not been fully implemented. It can be bypassed by setting the main power switch to connect the regulator's enable pin directly to 5V .

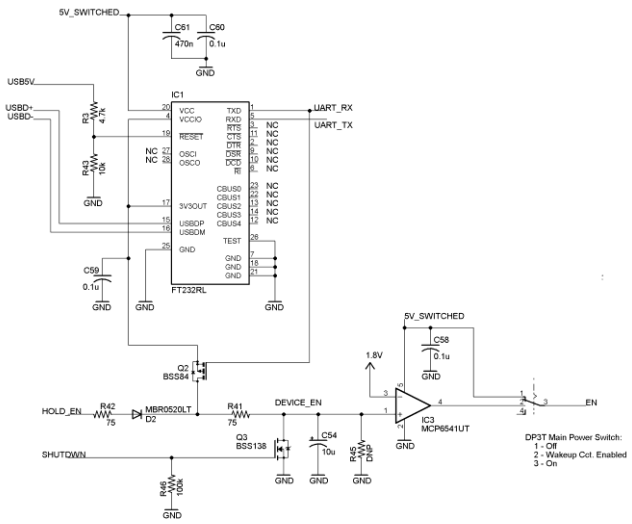

Figure 9: USB Interface with Wakeup Circuit

E. Connection Headers

This 8-pin header is the connection hub between the planes onboard computer, the power supplies and the Gimbal controller. The 5 V onboard power supply is connected to this header, as well as the USB signals for communication from the main flight computer. A separate 5 V supply for the motors is also provided through the header. A 100uF capacitor (C20) is included for coupling between motor supply and motor ground as seen in Fig. 10.

The roll motor and the pitch motor each have a 3-pin connection header for a 5 V power supply, motor ground and the motor control signal. The schematic representation of the layout of the two motor headers is shown in Fig. 10.

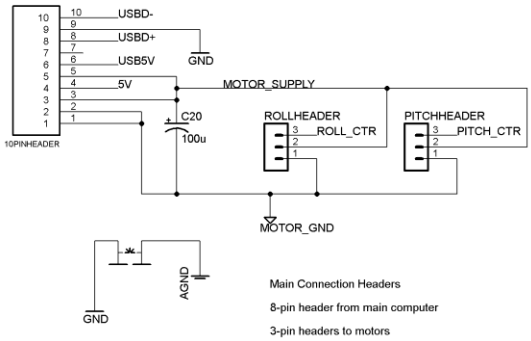

Figure 10: Connection Headers

F. XiNC2 Microprocessor with Kernel

The XInC2 microcontroller and its supporting components are chosen and arranged based on recommendations found in the User's Guide provided by Eleven Engineering [4]. The two banks of decoupling capacitors are placed as close as possible to the appropriate supply pins, or where layout geometries seem to demand decoupling. They are shown away from the XInC2 chip so as not to clutter the schematic. Timer resources at pins 22 and 53 are used for pulse-width-modulated motor control signals. Analog input pins are fed with analog readings from accelerometer for conversion in the on-board ADC. SPI port 1 is used to communicate with the XPD programming header and the EEPROM while SPI port 0 is used to communicate with the external ADC to collect the gyroscope measurements. I2C and UART communication are assigned to pins 60-61, and pins 64-65 respectively. The 1.8 V reference required by the XInC2 internal ADC is provided by a MCP1700T regulator. As seen in Fig. 11 the system clock is provided by the HC49/U 12.288 MHz crystal and the EEPROM is the Atmel AT25256AN.

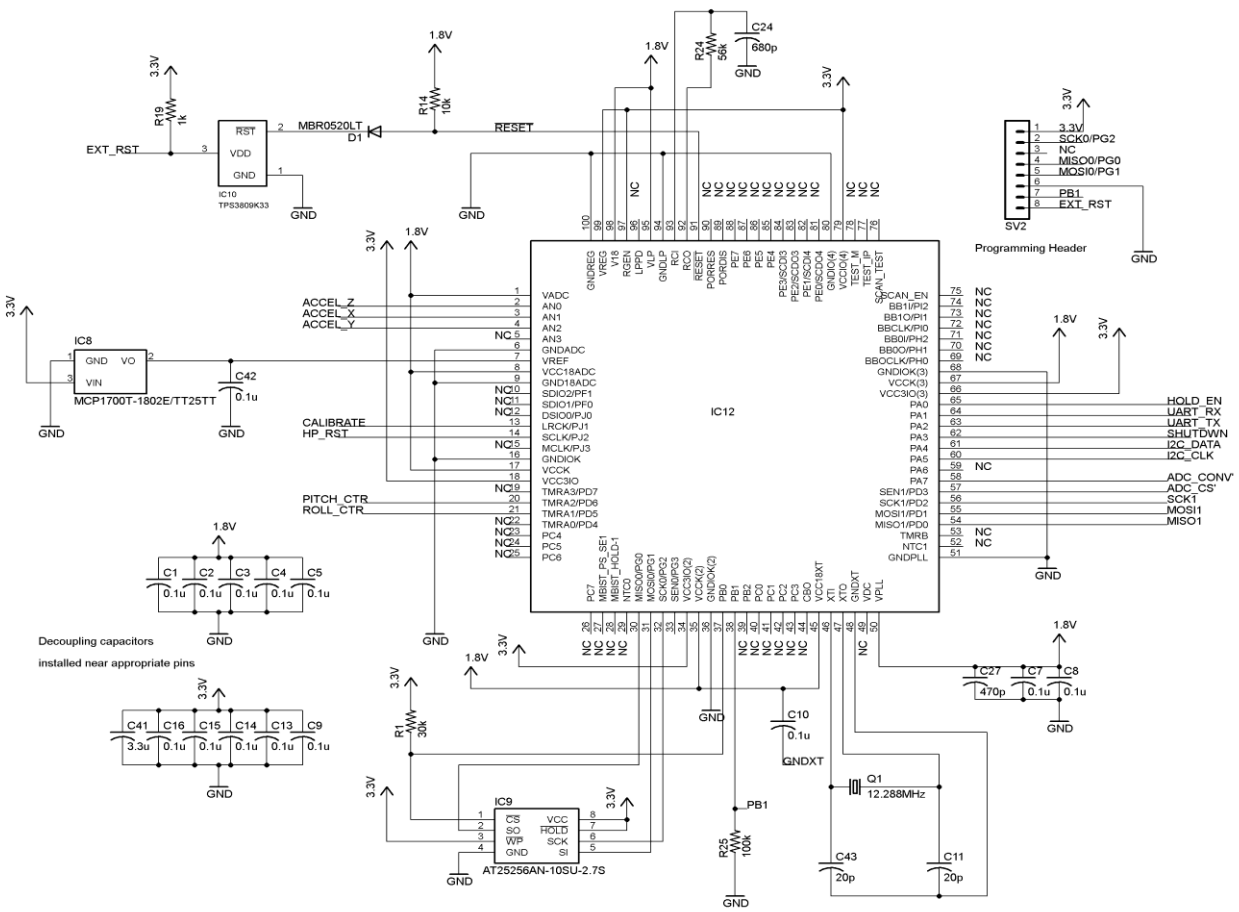

Figure 11: XInC2 Microprocessor with Kernel

III. FIRMWARE DESIGN

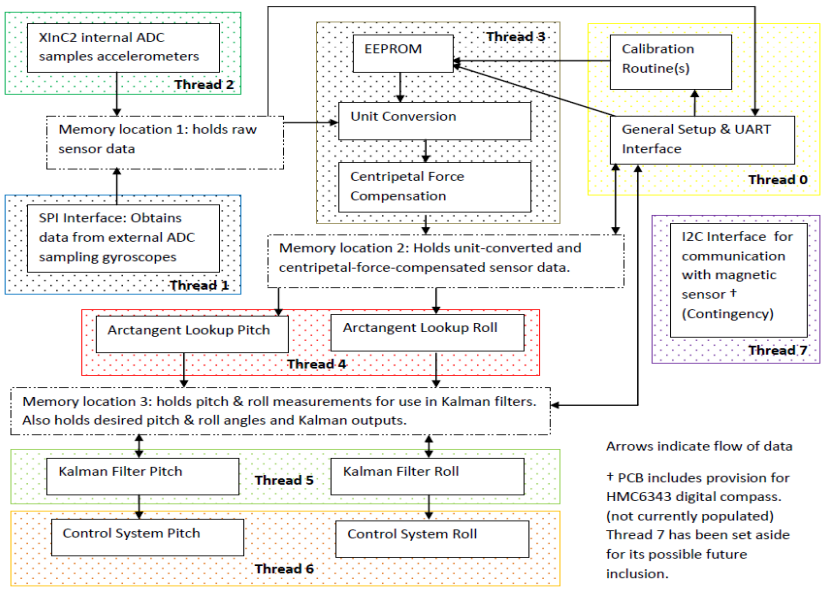

Figure 12: Firmware Flowchart

A. Firmware Overview

The XInC2 microprocessor has eight possible threads executing simultaneously [4]. The IMU makes use of seven threads leaving one available for possible expansion to include a digital compass. To ensure multiple threads are not attempting to access the same resources, semaphores are used to represent the various resources [4]. In this case the memory locations used for data storage are classified into 3 "areas" represented in Fig. 12 with mem1, mem2, and mem3 semaphores representing memory areas 1, 2 and 3 respectively. As the IMU is a firmware intensive project, requiring several tasks to be run concurrently these features of the XInC2 make it a good choice as a microprocessor.

B. Interface and Calibration: Thread 0

Thread 0 controls communication with the plane's main computer via a software ("bit-banged") UART interface. Using a communication protocol of over twenty commands, the main computer is able to fully control the operation of the device and poll for sensor and other data.

On command, this thread also runs routines for calibration of the device. One function of these routines is to measure the sensor outputs when the device is stationary. In this condition there is no motion and sensor outputs should be zero, but hardware imperfections create a nonzero offset which must be compensated for. After measuring this offset, it is possible to subtract it from each sensor reading later on.

The other function of calibration is to calculate a scale factor which will convert sensor readings into standard units. This is accomplished by creating a known offset in each sensor output. The known physical meaning of this offset is divided by the offset measured by the analog to digital converter (measured in bits). The resulting scale factor can be multiplied by subsequent ADC outputs to convert them to quantities with physical meaning. Scale factors and offset measurements are stored in the EEPROM memory for access after a reset. If no calibrations have been done, default scale factors are used.

C. Sensor Inputs: Thread 1 & 2

Thread 1 samples the gyroscopes through an external ADC. This data must be integrated as the raw output is in radians per second and an angle in degrees is required. Therefore 16 samples are summed, and the sum released to memory for Thread 3 to finalize the integration. To prevent erroneous integration the ADC is sampling as close to continuously as possible. For this to happen, Thread 1 is given primary control of the mem1 semaphore. The semaphore is only released when Thread 1 has completed all 16 iterations and is restarting the sampling after clearing the memory locations. Before the memory is cleared the semaphore is put up allowing Thread 2 to post its data to the memory area and for Thread 3 to access the memory it needs as inputs.

Thread 2 samples the accelerometers using the onboard ADC. These signals represent accelerations which are converted into angles using the arctangent lookup table in Thread 4.

D. Unit Conversion, Compensation and EEPROM : Thread 3

The role of Thread 3 is to convert the numerical ADC outputs to more meaningful quantities. First, any offset or bias is subtracted from each sensor reading, compensating for imperfections in the sensing and filtering hardware. After this "zeroing" process, the accelerometer and gyroscope readings are multiplied by scale factors which convert them to units of millimeter per seconds squared $\frac{mm}{s^2}$ and $\frac{mRad}{s}$ milli-radians per second respectively.

The summed gyroscope readings provided by Thread 1 are converted to units of $\frac{10*mRad}{s}$ (i.e. ten-thousandths of radians per second, and then multiplied by the gyroscope sampling rate to turn the quantity into a true integration in units of $10 * mRad$ (ten-thousandths of radians. This somewhat awkward unit was chosen because it keeps the magnitude of the numbers large enough to maintain reasonable accuracy, but small enough to avoid register overflow.

The final step is to compensate the X and Z axis accelerometer readings (the accelerometers in the roll plane) for centripetal force, which otherwise would distort the readings. The effect of centripetal force is calculated based on the plane's velocity and gyroscope readings using newtonian motion equations, and subtracted from the accelerometer readings. This makes these readings reliable during aerial turns.

All scaling factors and zero readings used by the unit conversion process are calculated and provided by the calibration routine.

E. Arctangent Lookup Table: Thread 4

Thread 4 is the Arctangent lookup thread, the purpose of this thread is to take a horizontal and a vertical axis accelerometer measurement and find the corresponding angle of pitch or roll associated with those measurements. The method employed for calculating the arctangent function from

the passed variables is the table lookup method. Two tables are laid out in memory. The first one is a table of division values X/Z (or Y/Z) for roll (and pitch) respectively. The second table contains corresponding arctangent value of the division result. The division result of the passed variables is then calculated by a signed division subroutine, which then gets compared to the first table value. If the value is greater than the indexed table value, then the index is increased and the next value of the table is looked at. The comparison continues until the indexed table value is equal or less than the division result. The thread then grabs the corresponding arctangent value which is given by the index value displacement from the start of the angle table. If the index value hits a predefined maximum, corresponding to the ±90 degree useful angle of our chosen sensors, the value is replaced by the maximum index value, and the arctangent of ±90 degrees is passed from this thread.

F. Kalman Filter: Thread 5

Threads 5 runs a Kalman filter one the angles for roll and the angles for pitch. Since the accelerometers and gyroscopes are both used to measure angles of displacement, the two sets of readings must somehow be combined into a single system output. Essentially, the Kalman filter is used as an intricate weighted average which calculates the most probable orientation of the gimbal based on the two sets of sensor data. The integrated gyroscope readings are used as a measurement of the angular displacement of the device since the last measurement, and the accelerometer readings are used to measure the current orientation of the device. The Kalman filter then produces an estimate of the device's actual position with the minimum amount of error.

G. Control System: Thread 6

Thread 6 contains the control System for the servo motors for pitch and roll independently. First the thread grabs the current state values for the angular orientation from RAM. The values are then converted to a duty cycle period adapted from the 50Hz period that the servo motor expects. A pulse width modulation signal is then generated by loading the period into the Capture-Compare module 0 and loading the duty cycle into the Capture-Compare module 1 for pitch (module 2 for roll) of Timer A. The timer is then started in compare mode, which counts to the value of the duty cycle with high output. It then switches to low output until the count to the value of period is reached. To accurately control the servos to a desired angle the desired angle is subtracted from the Kalman angle, giving a value of required angular displacement. The duty cycle is then generated from the value of required angular displacement through a conversion factor which is unique to the servo motors being used. After the required duty cycle change is computed, it is added to the past value of duty cycle to form a negative feedback loop. The loop will then grab the next Kalman values from RAM and repeat the process.

IV. Testing

Hardware is tested immediately after assembly. By monitoring current draw and probing appropriate nodes. Correct assembly and functionality of hardware can be verified.

Power consumption is tested by measuring current drawn by the device. The device is supplied by a constant 5V supply. The measured current is as follows:

TABLE 1
Current Power Consumption of the IMU

	Current Drawn (mA)	Power Drawn (W)
Device powered-up and running, no motor motion	30	0.15
Device powered-up, USB interface powered up	40	0.2
Device powered-up and running with motors running	2000	10 (peak)

The overall function of the device is tested using the gimbal fixture to be used on the plane. The board is commanded to hold angles of 0°, 5°, 10°, and so on to 45° in both pitch and roll axes. The actual angle held by the device is then measured and recorded. Results are as follows:

TABLE 2
Deviations in Angular Position of the IMU

Worst case deviation	3.15°
Best case deviation	0.39°
Average deviation	1.92°

V. Conclusions And Future Directions

The inertial measurement unit has been shown to be capable of accurately (within 2°) holding a Gimbal fixture in a fixed orientation. The device itself is both low profile and low power, measuring 2 by 4 inches and consuming at most 40mA of current at 5V.

Several important improvements could be made to the design. First a more sophisticated control system could be developed for use in controlling the motors. The current method of proportional control does not necessarily produce the smoothest or fastest motion of the motor to its desired position. A possible upgrade could be to a proportional-integral-derivative (PID) control system from the current proportional system.

Second, the device's PCB includes provisions for mounting the HMC6343 digital compass IC directly on the board, or remotely using a harness. Having a compass would provide a third set of data (along with accelerometers and gyroscopes) which could increase the accuracy of orientation sensing. This compass would communicate with the XInC2 processor via I2C interface. Currently no firmware has been written for this interface or for use of the compass data.

Third, the arctangent lookup table could easily be expanded to include more values, thus improving accuracy of orientation sensing using the accelerometers.

Finally, the design itself could be improved by using better quality sensors and components or a more powerful processor.

VI. References

[1] STMicroelectronics. "*LPR530AL Data Sheet,*" *www.st.com*, 2009 STMicroelectronics. [PDF]. Available: http://www.st.com/stonline/products/literature/ds/15812.pdf [Accessed: Apr 11, 2010]

[2] STMicroelectronics. "*LY530ALH Data Sheet,*" *www.st.com*, 2009 STMicroelectronics. [PDF]. Available: http://www.st.com/stonline/products/literature/ds/15801.pdf [Accessed: Apr 11, 2010]

[3] STMicroelectronics. "*LIS331AL Data Sheet,*" *www.st.com*, 2009 STMicroelectronics. [PDF]. Available: http://www.st.com/stonline/books/pdf/docs/13947.pdf [Accessed: Apr 11, 2010]

[4] Eleven Engineering. "XInC2 Users Guide" www.elevenengineering.com. 2005 Eleven Engineering [PDF]. Available: http://www.elevenengineering.com/documents/IG/XInC%20Users%20Guide_DO1100_v1.8.pdf [Accessed : Apr 11, 2010]

[5] Honeywell. *"HMC6343 Data Sheet," www.honeywell.com*. 2007 Honeywell [PDF]. Available: http://www51.honeywell.com/aero/common/documents/myaerospacecatalog-documents/Missiles-Munitions/HMC6343.pdf [Accessed: Apr 11, 2010]