MICROCONTROLLER

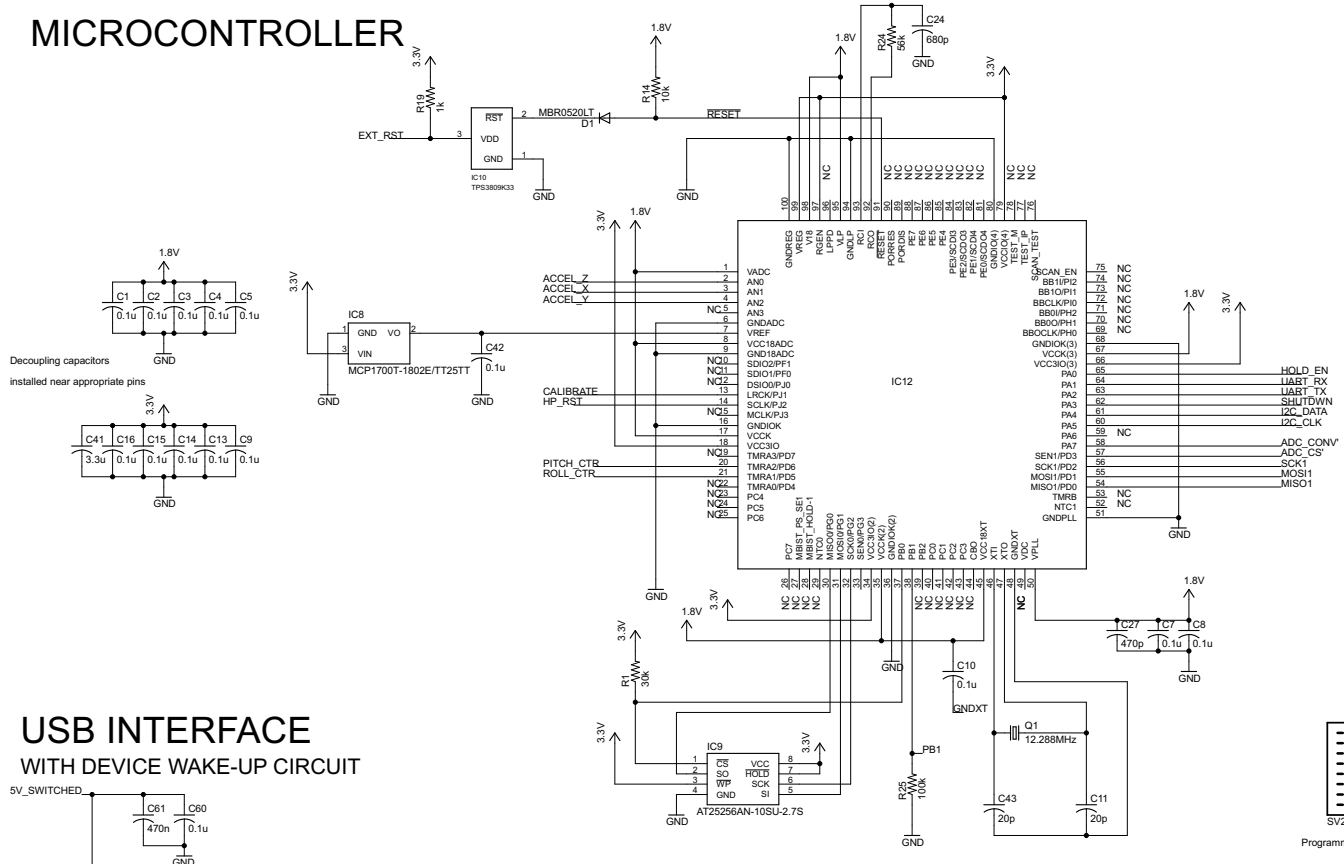

NOTES

All resistors are 0.1W, 5% tolerace unless otherwise noted

All capacitors are 6V or higher, 10% tolerace unless otherwise noted

Revision History:

Rev B - Correction to signal conditioning filters
Motor ground pins added to main header
LCD header modified
Rev C - Passives changed from 1206 to 0805
Rev D - Complete design re-work following
design review and meetings with UAARG
Accelerometer added
External ADC added
USB interface & wake-up circuit added
All filters redesigned
Rev E - Revised Wake-up circuit

USB INTERFACE

WITH DEVICE WAKE-UP CIRCUIT

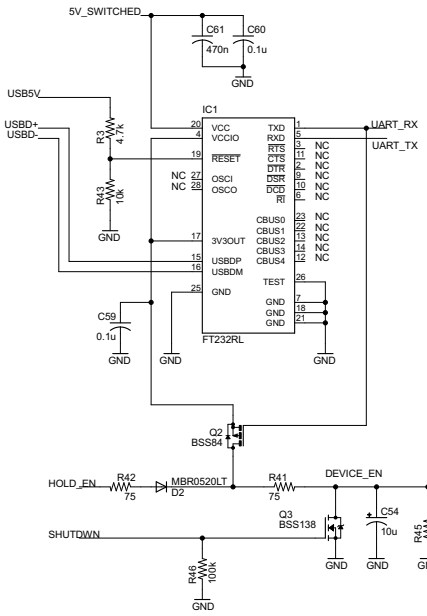

REGULATOR

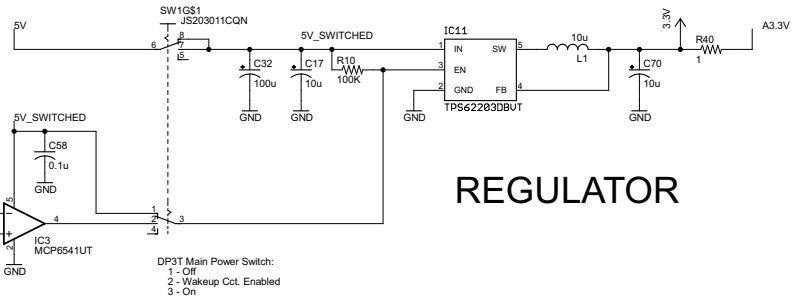

EE400/401: GROUP 14	
IMU GIMBAL CONTROLLER	
REVISION E	SHEET 1/3

SENSOR ARRAY: GYROSCOPES

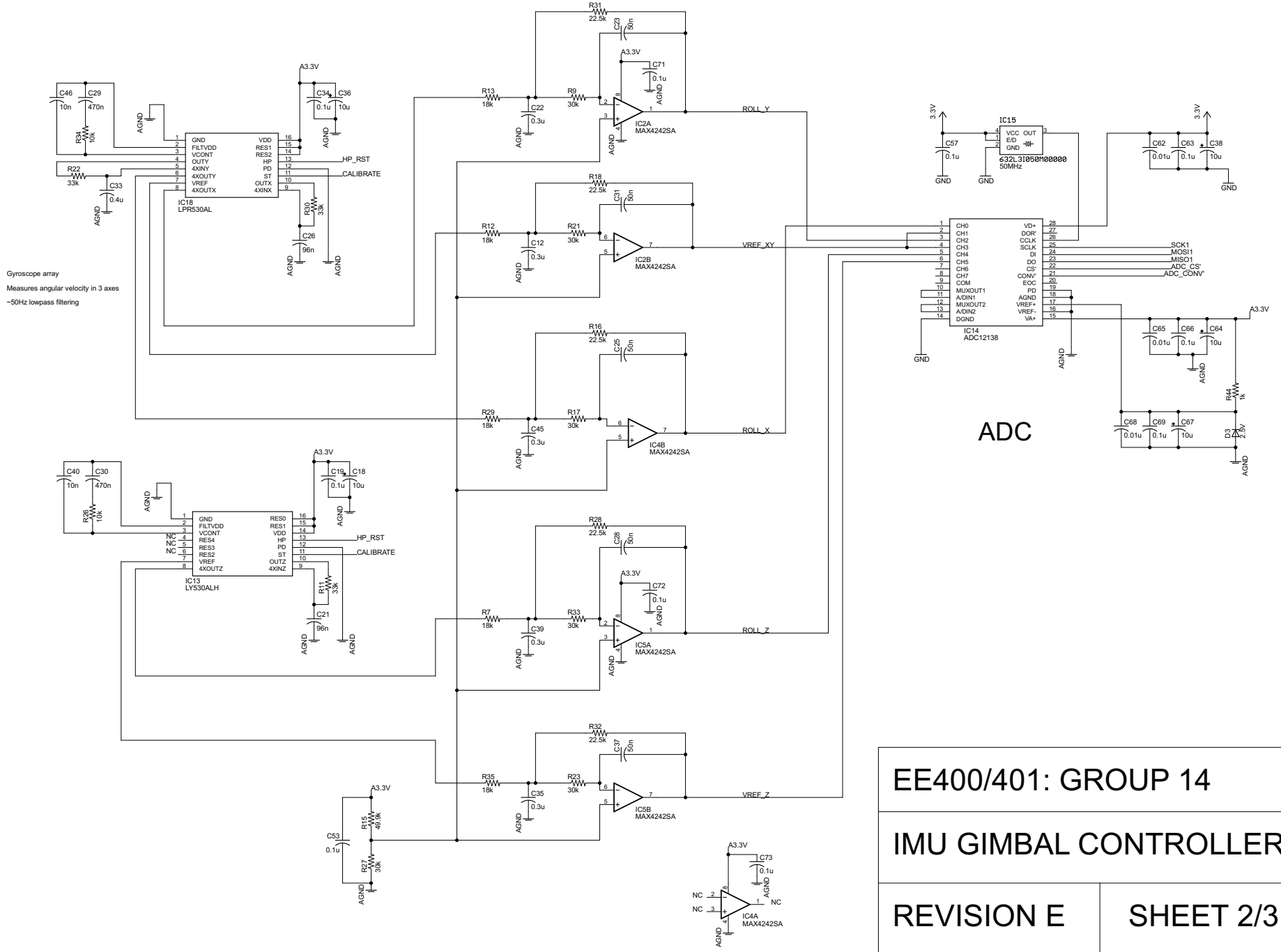

EE400/401: GROUP 14	
IMU GIMBAL CONTROLLER	
REVISION E	SHEET 2/3

SENSOR ARRAY: ACCELEROMETER AND COMPASS

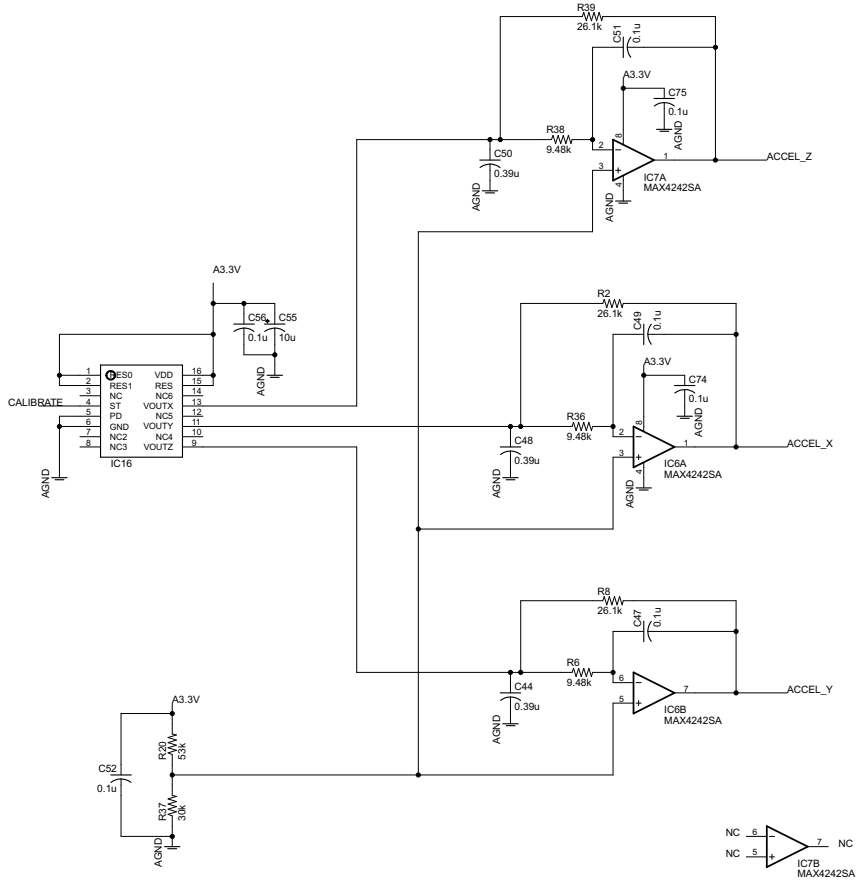

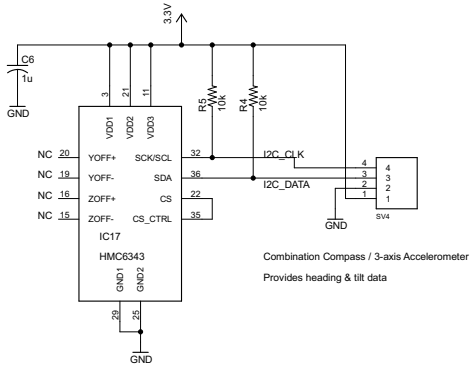

CONNECTION HEADERS

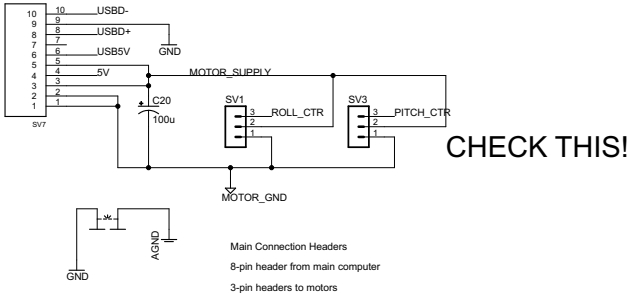

CHECK THIS!

EE400/401: GROUP 14	
IMU GIMBAL CONTROLLER	
REVISION E	SHEET 3/3